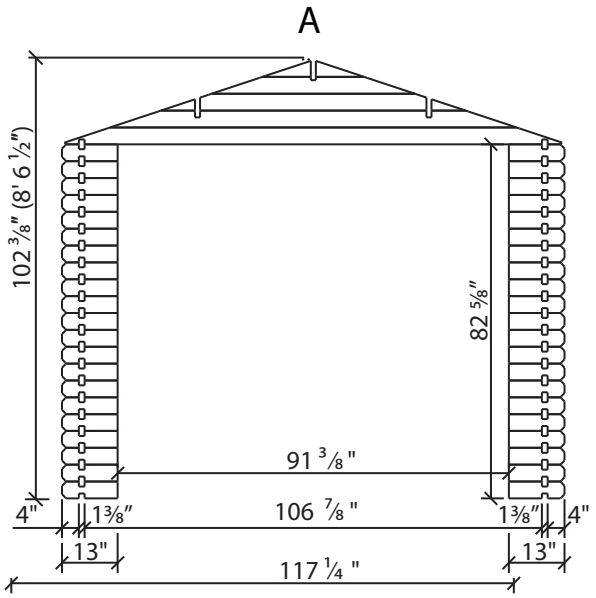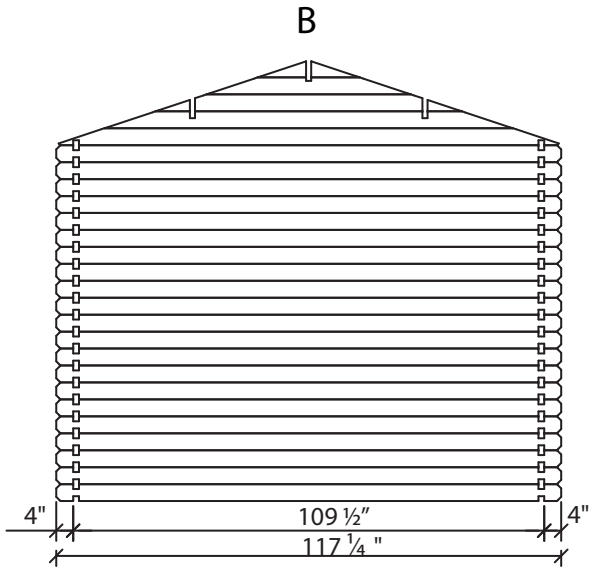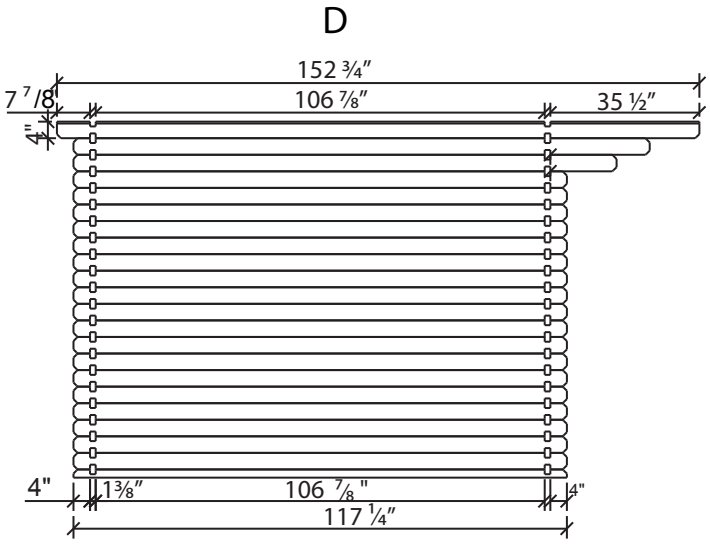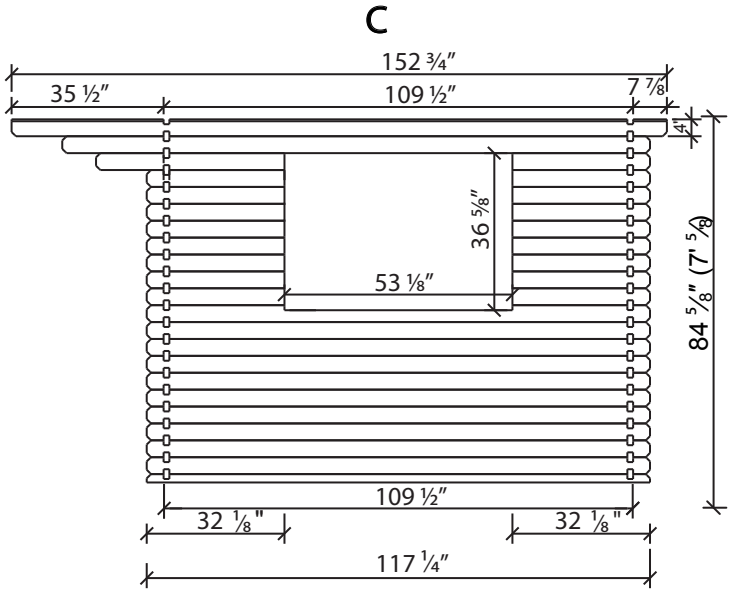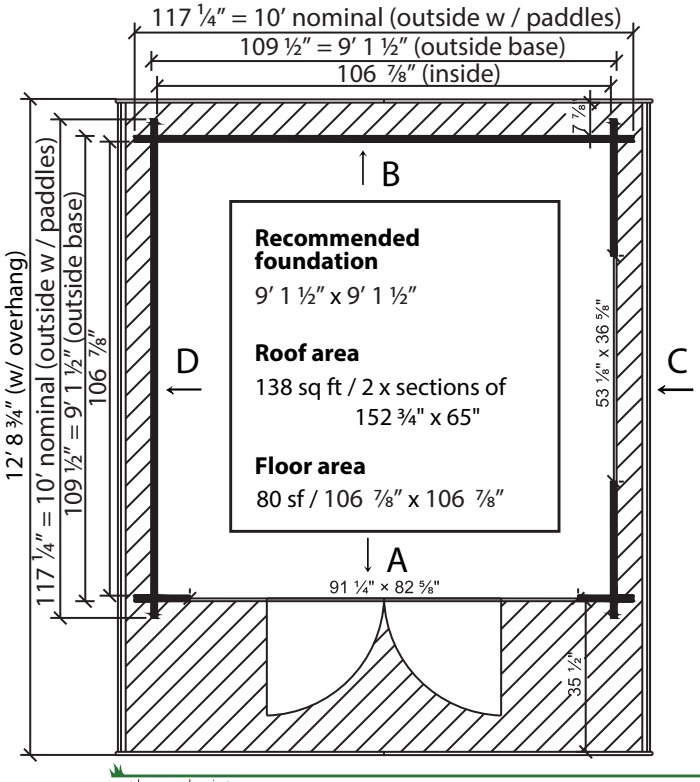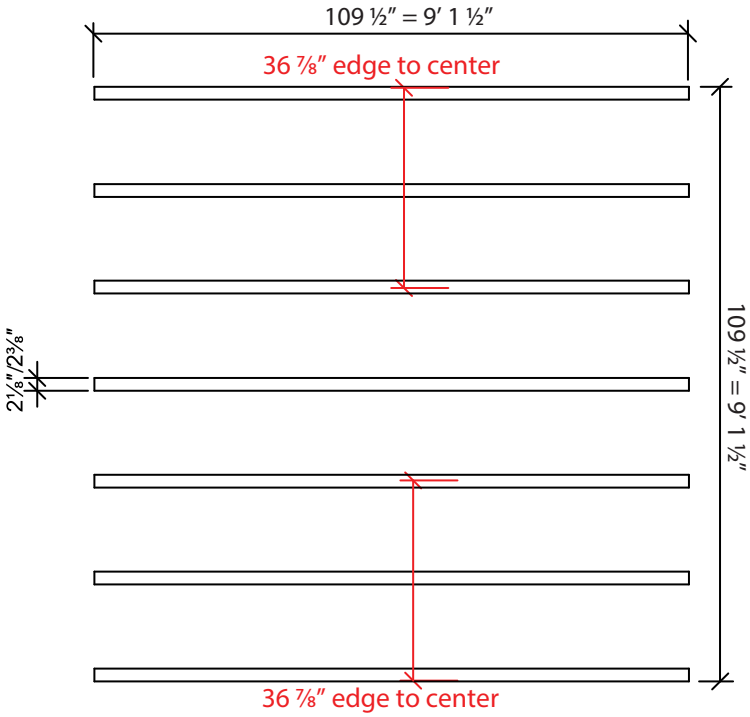MYRTLE 10 x 10